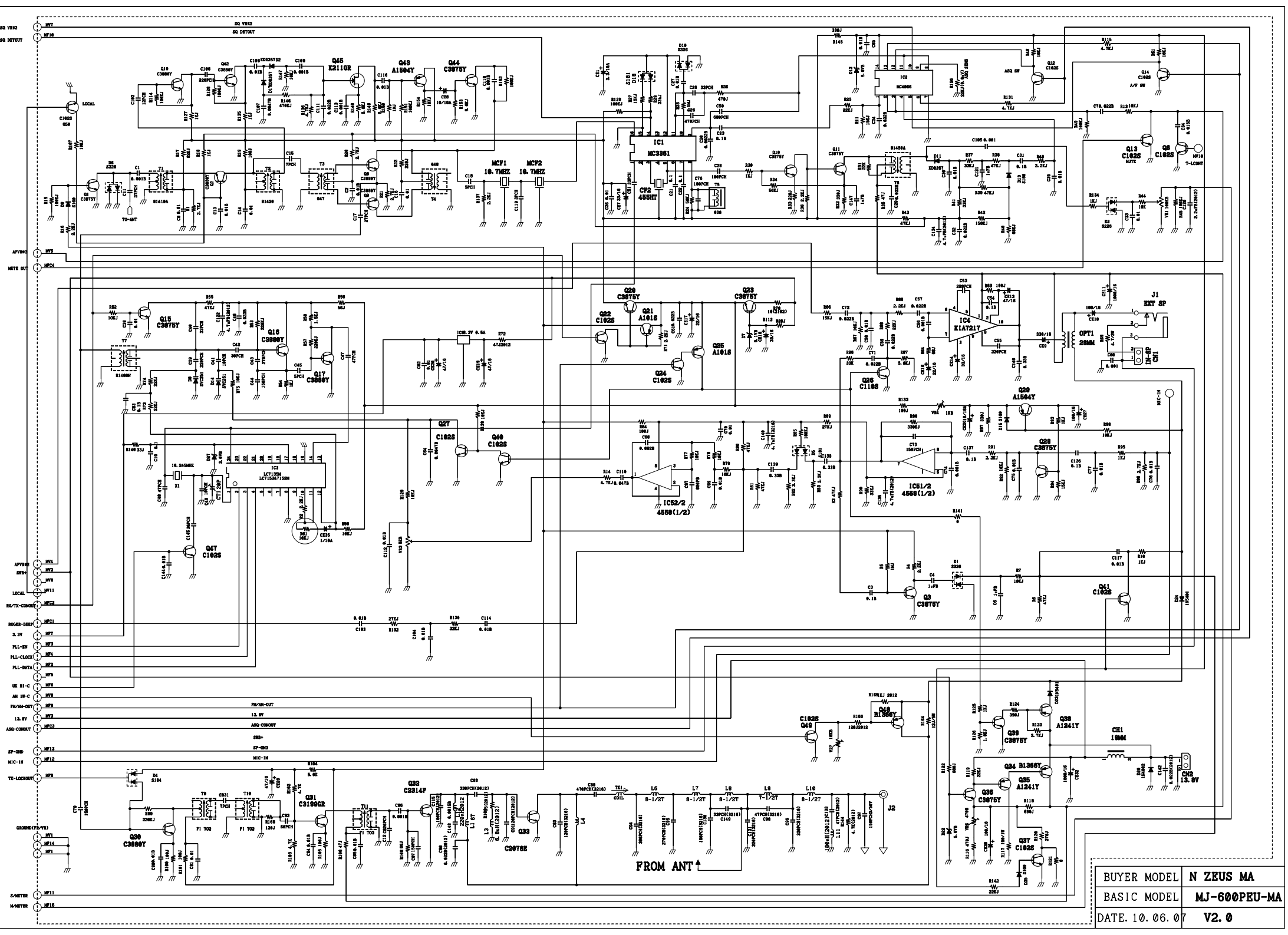

BUYER MODEL	N ZEUS MA
BASIC MODEL	MJ-600PEU-MA
DATE. 10. 06. 07	V2. 0